Quantum Design

Magnetic Property Measurement System

Automated Background Subtraction User's Manual

Part Number 1014-120

Quantum Design

11578 Sorrento Valley Rd.
San Diego, CA 92121-1311
USA

Technical support	(858) 481-4400
	(800) 289-6996
Fax	(858) 481-7410

Second edition of manual completed October 1999.

Trademarks

U.S. Patents

4,791,788	Method for Obtaining Improved Temperature Regulation When Using Liquid Helium Cooling
4,848,093	Apparatus and Method for Regulating Temperature in a Cryogenic Test Chamber
5,053,834	High Symmetry DC Squid System
5,110, 034	Superconducting Bonds for Thin Film Devices
5,139,192	Superconducting Bonds for Thin Film Devices
5,311,125	Magnetic Property Characterization System Employing a Single Sensing Coil Arrangement to Measure AC Susceptibility and DC Moment of a Sample (patent licensed from Lakeshore)
5,319,307	Geometrically and Electrically Balanced DC Squid System Having a Pair of Intersecting Slits
5,647,228	Apparatus and Method for Regulating Temperature in Cryogenic Test Chamber

Foreign Patents

U.K.	9713380.5	Apparatus and Method for Regulating Temperature in Cryogenic Test Chamber
Canada	2,089,181	High Symmetry DC Squid System
Japan	2,533,428	High Symmetry DC Squid System
Japan	2,533,428	High Symmetry DC Squid System

C O N T E N T S

Table of Contents

Figures

P R E F A C E

Contents and Conventions

P.1 Introduction

This preface contains the following information:

- Section P.2 discusses the overall scope of the manual.
- Section P.3 briefly summarizes the contents of the manual.
- Section P.4 illustrates and describes conventions that appear in the manual.

P.2 Scope of the Manual

This manual discusses the functionality of Quantum Design's new MPMS Automated Background Subtraction (ABS) feature. The ABS feature is part of the MPMS MultiVu software application.

Detailed information about the MPMS MultiVu software may be found in the *Magnetic Property Measurement System: MPMS MultiVu Application User's Manual.*

P.3 Contents of the Manual

- Chapter 1 introduces the Automated Background Subtraction feature.
- Chapter 2 explains how to take sample measurements with ABS.
- Appendix A discusses background subtraction data files.
- Appendix B summarizes ABS-imposed changes made to the DC and RSO data file formats.

P.4 Conventions in the Manual

File menu	**Bold** text distinguishes the names of menus, options, buttons, and panels appearing on the PC monitor.
File➢Open	The ➢ symbol indicates that you select multiple, nested software options.
`.dat`	The `Courier` font distinguishes characters you enter from the PC keyboard, and it distinguishes code and the names of files and directories.
<Enter>	Angle brackets < > distinguish the names of keys located on the PC keyboard.
<Alt+Enter>	A plus sign + connecting the names of two or more keys distinguishes keys you press simultaneously.
	A pointing hand introduces a supplementary note.
	An exclamation point inside an inverted triangle introduces a cautionary note.
	A lightning bolt inside an inverted triangle introduces a warning.

C H A P T E R 1

Introduction to Automated Background Subtraction

1.1 Introduction

This chapter contains the following information:

- Section 1.2 presents an overview of the MPMS Automated Background Subtraction feature.

1.2 Overview of Automated Background Subtraction

The Automated Background Subtraction (ABS) feature in the MPMS MultiVu software application facilitates the collection of a sample holder's response (background data) and the subtraction of that data from a combined (sample + sample holder) measurement. In any measurement performed on the Magnetic Property Measurement System (MPMS), the reported susceptibility is the combination of the susceptibility of the sample and the sample holder. If the sample holder's magnetic response is homogenous throughout the length of the measurement—as it would be, for example, with a quartz tube—then its contribution to the measured signal is negligible. However, in many cases, the size, shape, and consistency of the sample requires a sample holder that produces its own signal. In many measurements, as the sample response decreases, the response of the holder that is adjacent and/or surrounding the sample becomes a greater and greater component of the overall measurement. As a consequence, the measured susceptibility of the sample becomes less and less accurate. This effect is even more dramatic if the characteristics of the sample holder response (its shape and magnitude) in combination with the sample's response produce a signal that cannot be fit to a dipole response for the MPMS second order gradiometer. The results of these types of measurements produce moment calculations with poor regression fit values and questionable accuracy.

The ABS feature is designed to automate the background subtraction process by which the magnetic susceptibility contribution of the sample holder is separated from the sample measurement, thus producing a more accurate measurement of the actual sample. ABS performs background subtraction on a point-by-point basis to the measured SQUID response using background data collected on the sample holder and scaled to the SQUID range, gain, and calibration. This achieves measurements with higher levels of accuracy, especially when the measurement response is less than ideal because the background and the sample responses are of relatively equal magnitude but of significantly different shape.

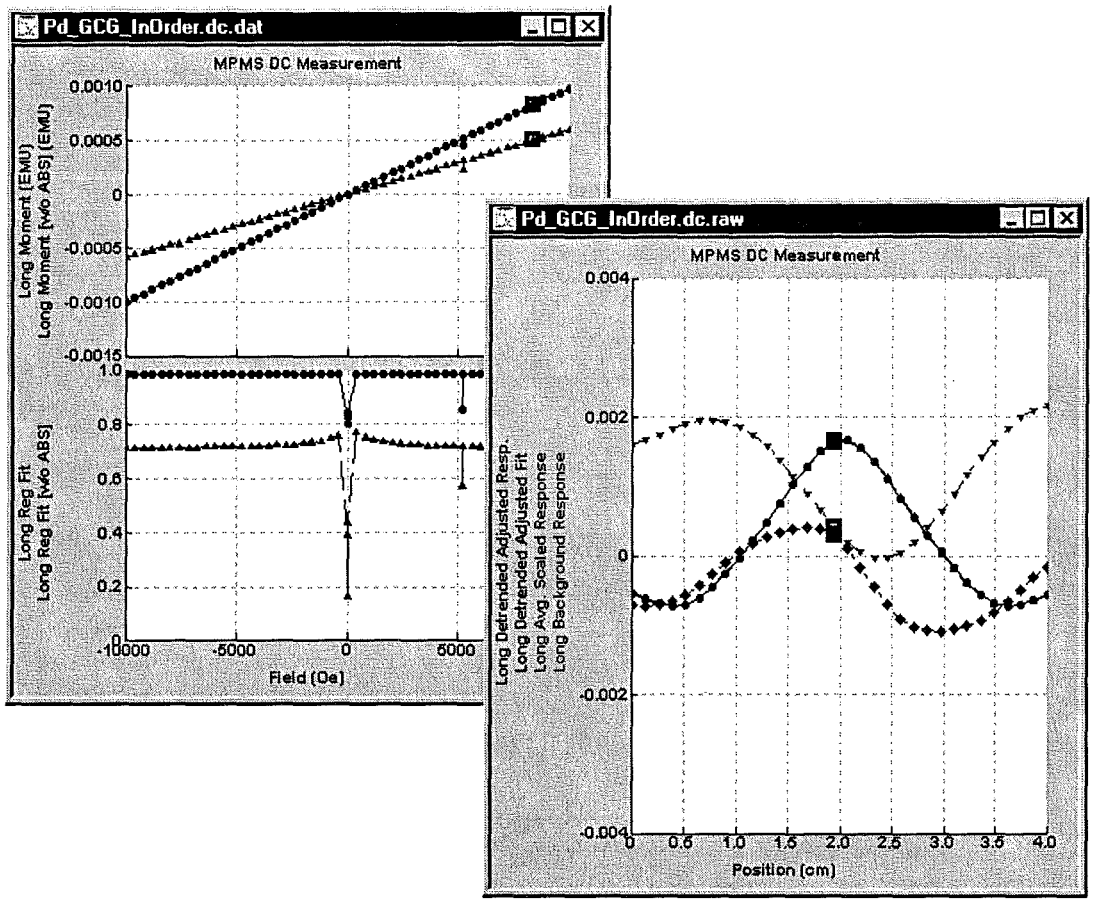

Figure 1-1. Illustration of Effect of Automated Background Subtraction on Sample Measurements

Left Figure: Field sweep measurements made with Automated Background Subtraction. The data file shows the sample moment measured when using background subtraction (circles) and when not using background subtraction (triangles).

Right Figure: The `lastscan` file shows the average scaled response (diamonds) that is produced from measuring the sample in the sample holder. The background response (triangles) is shown on the same scale as the measurement. The results of background subtraction (circles) produce the predicted dipole response of the sample (with a good regression fit) from which the sample moment is calculated.

For more information on the effects of sample holders on sample measurements and background subtraction techniques, see Quantum Design application notes 1014-201 and 1014-213.

C H A P T E R 2

Sample Measurements

2.1 Introduction

This chapter contains the following information:

- Section 2.2 presents an overview of the ABS sample measurement process.
- Section 2.3 explains how to take immediate-mode sample measurements with the ABS feature.
- Section 2.4 discusses the ABS sequence commands.

2.2 Overview of Sample Measurements with ABS

The key to using the ABS feature is identifying the center position of the sample in the sample holder before performing the actual sample measurement. Once MPMS MultiVu locates the centered sample position, it can lock this position in place while measuring the sample holder background response. In this way, the sample holder response is recorded without the contribution of the sample response, and the sample holder response has the same characteristic shape it will subsequently have when the sample is later mounted and measured. A surrogate sample is used to establish a centered position on the sample holder.

Using the ABS feature requires a three-step process.

(1) The center position of the sample in the sample holder must be established. This is accomplished by performing a centering scan on a high-moment surrogate sample that is located at the expected position of the sample. Establishing this position allows the software to first record the response of the sample holder background as if the sample were in place and centered. See section 2.3.1.

(2) The sample holder background response is collected and stored in a separate data file. This data file contains the measurement parameters and the SQUID response of each measurement scaled to the SQUID range, gain, and calibration. See section 2.3.2.

(3) The sample is mounted in the sample holder, the sample measurements are made, and the background SQUID response that was stored in the background data file is subtracted from the sample measurement response. See section 2.3.3.

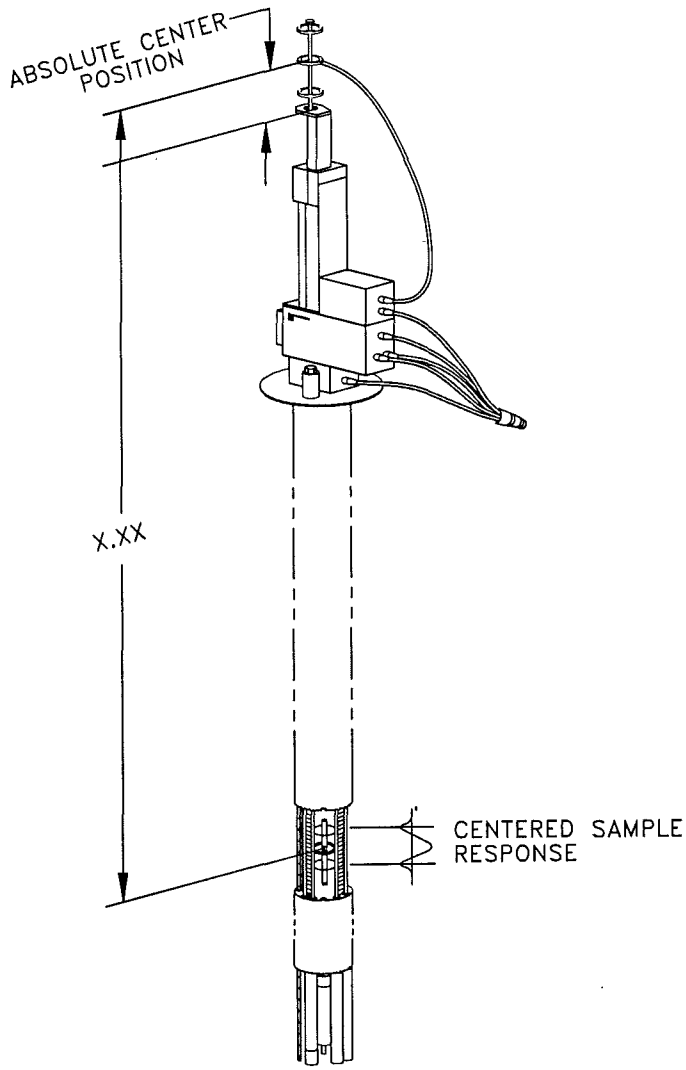

Figure 2-1. Hardware Overview of ABS Measurement Process

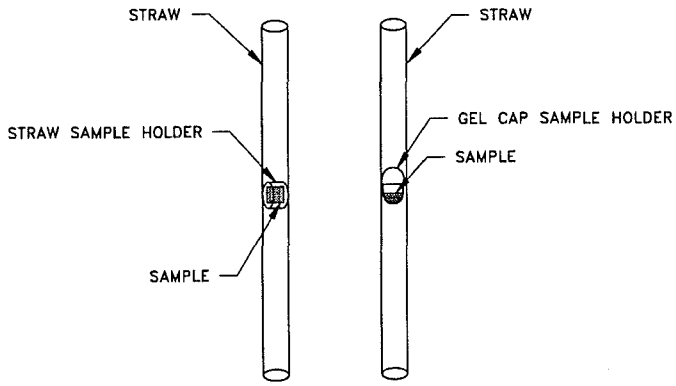

Figure 2-2. Samples Mounted in Straw Sample Holder and Gel Cap Sample Holder

2.3 Taking Sample Measurements

The following procedures explain how to take sample measurements with the ABS feature in immediate mode. For information about the Automated Background Subtraction sequence commands, refer to section 2.4.

2.3.1 Using a Surrogate to Establish the Center Position

Using the ABS feature requires locating the absolute center position of whatever sample will be measured. Locating the absolute center position allows MPMS MultiVu to position the sample holder and the sample in the exact same location for both recording background data and applying that background data to the final sample measurement.

MPMS MultiVu records the absolute transport position at the completion of a sample centering operation (see sections 2.3.2 and 2.3.3). By centering a surrogate sample, you establish this absolute center position without having to use the actual sample that will be measured. You thus also avoid subsequently introducing the sample to unwanted environmental factors.

2.3.1.1 CHOOSE THE SURROGATE

An adequate surrogate produces a large dipole response at relatively small magnetic fields. In fields as low as 10 Oe, a small piece of stainless steel wire taped to the sample holder (which may be either a plastic straw or a quartz tube) with Kapton tape works very well.

2.3.1.2 LOCATE THE CENTER POSITION FOR THE SURROGATE

1. Mount the surrogate on the straw and note its position so that the actual sample that will be measured can be placed in exactly the same position. You can indicate the position of the surrogate by measuring its position from the top of the holder or, if you are using a plastic straw for a sample holder, by placing a small pin hole in the straw at the location of the surrogate. Refer to figure 2-3.
2. Center the surrogate using the DC or RSO sample centering menu. Once the surrogate is centered, the software retains the absolute center position until another centering operation is performed.
3. Remove the surrogate from the straw and position the sample holder so that it will hold your sample in exactly the same position in which the surrogate was held (note you do not use the actual sample in this step). For example, if you will be using a gel cap, prepare the gel cap

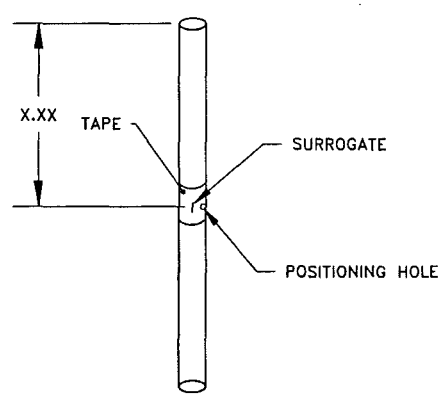

Figure 2-3. Recording the Surrogate Sample Position

and position it inside the straw in the same orientation in which it will hold the sample. Make certain you mount the gel cap such that the sample center will be in the identical position as the surrogate center—in this example, at the location of the pin hole (see figure 2-4). Now you are ready to collect the background response data.

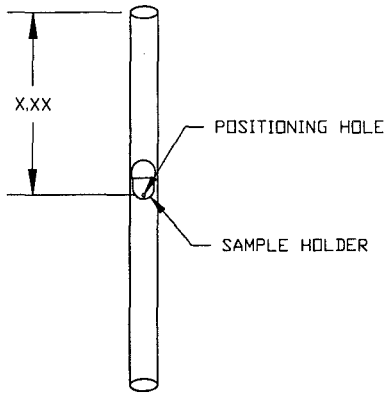

Figure 2-4. Positioning the Sample Holder

2.3.2 Recording the Background Response

1. Enable automated background data recording by selecting the **Measure➢Record Background Data** menu item in MPMS MultiVu, and then enable the **Data Collection Enable** check box in the **Record Background Data** dialog box (figure 2-5).

   The **Data Collection Enable** check box must be enabled in order to record the background response data that will be used in future sample measurements. Once the check box is enabled, you must set the measurement parameters for the types of measurements you will use to collect both the background and the sample data. These measurement parameters will be locked during the recording of the background data and during the application of this background data to future sample measurements.

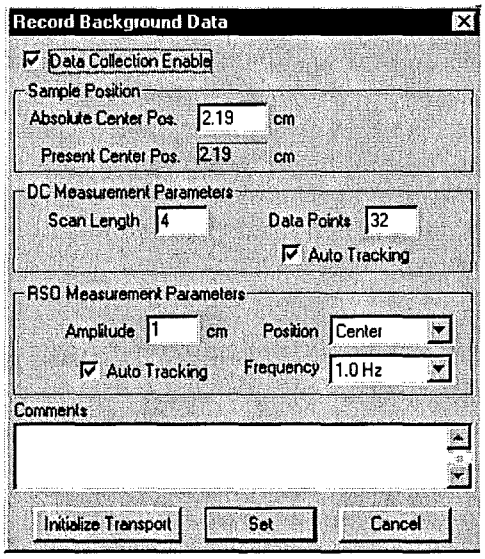

Figure 2-5. **Record Background Data** Dialog Box

2. Select the sample center position.
   - **Absolute Center Position** indicates the position of the sample center in absolute centimeters from the bottom of the transport movement (established during a transport initialization operation).
   - **Present Center Position** indicates the position of the sample center in absolute coordinates that were recorded during the last centering operation.

   In most cases, the **ABS Center Position** and **Present Center Position** values are identical.

3. Set the **DC Measurement Parameters** and the **RSO Measurement Parameters**. These measurement parameters, which must be fixed while the background subtraction data is being recorded and applied, directly affect the number of data points, the absolute center position, and the spacing between points of the measurement response. The measurement parameters are stored in the header section of the background subtraction data file so that they may be used when the background data is applied to future sample measurements.

NOTE

In order to subtract the background response from the measurement response, the measurement parameters for the background data must be **identical** to those used for the sample measurement. This applies for both DC and RSO measurements.

4. Use the **Comments** field to enter any additional information about the sample, the mounting technique, and so on. These comments, along with the measurement parameters, are stored in the header section of the background subtraction data file.
5. Select the **Initialize Transport** button to reset the transport calibration position. Resetting the transport calibration position does not affect the sample center position.
6. Select the **Set** button to enable (or disable) background data collection. If background data collection is enabled, subsequent DC or RSO measurements are performed at the specified center position and with the specified measurement parameters. The measurement also generates a background subtraction data file that has the same base name as the measurement data file but uses the `.bkd` file extension—for example, `basename.dc.bkd` or `basename.rso.bkd`. The immediate-mode measurement dialogs indicate that background data is being recorded (figure 2-6), and you are unable to modify the measurement parameters that were specified in the **Record Background Data** dialog.

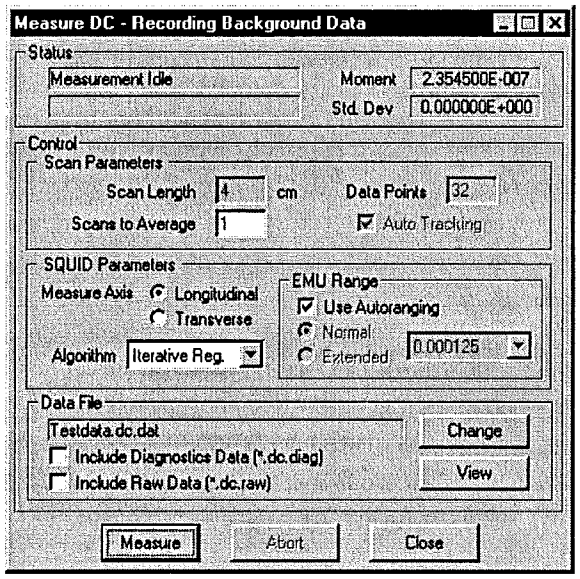

Figure 2-6. **Measure DC** Dialog Box Indicating That Background Data Recording Is Enabled

2.3.3 Subtracting the Background Data

1. After the background data is collected, mount the sample in the same position in which the surrogate was mounted when the center position was established and the background data was collected. Refer to figure 2-7.

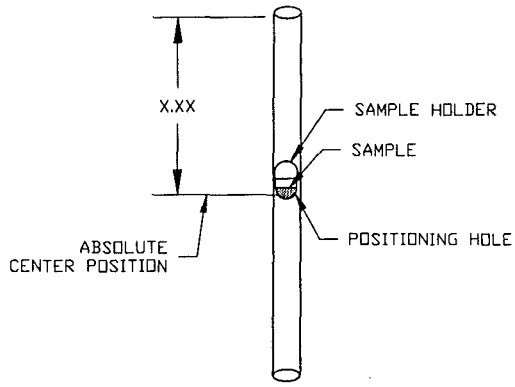

Figure 2-7. Positioning the Sample

2. Enable automated background data subtraction by selecting **Measure➢ Subtract Background Data** in MPMS MultiVu, and then enable the **Data Subtraction Enable** check box in the **Subtract Background Data** dialog box (figure 2-8).

   When **Data Subtraction Enable** is enabled, the **Change** button in the **Subtract Background Data** dialog box is enabled.

3. Select the **Change** button to select the background subtraction data file you want to apply to future measurements. When a valid background subtraction data file is selected, the measurement parameters as well as any comments stored in the file are displayed in the **Subtract Background Data** dialog (figure 2-8).

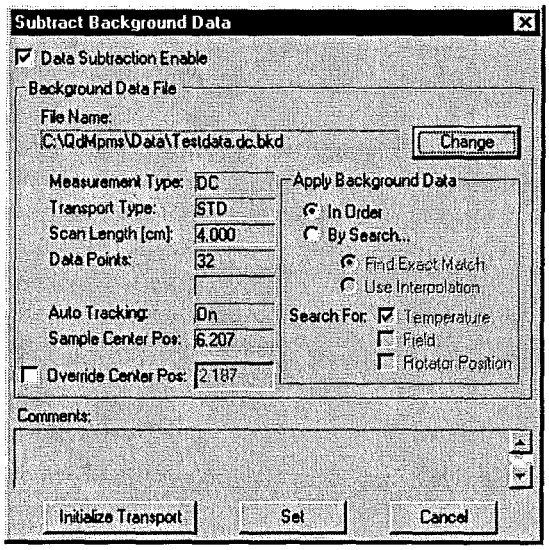

Figure 2-8. **Subtract Background Data** Dialog Box

4. Determine whether the sample holder was modified since the background data was collected. If it was, enable the **Override Center Position** check box and then enter the new absolute center position value.

5. Use the **Apply Background Data** parameters to determine the method by which the background data in the file is applied to future measurements.

   - **In Order** applies each line of data in the background subtraction data file in the order in which it is stored. As measurements are completed, the background data that is applied to each measurement is taken from the file in the same order in which it was recorded. When the end of the background data file is reached, the next measurement takes background data from the beginning of the file and the process continues as before until data subtraction is disabled. This application method requires that you use the exact same sequence of events for applying the background data as was used for recording the data.

- **By Search** uses the specified search method—either **Find Exact Match** or **Use Interpolation**—to search for matching temperature, field, and/or rotator position target values as specified in the **Search For** criteria. Any number of the **Search For** criteria may be specified. When the measurement is complete, the background subtraction data file is searched for matching values of the specified **Search For** criteria. The file is searched for matches to the present *target* criteria, that is, the present target temperature and/or present target field.

  ☑ The **Find Exact Match** search method searches for an exact match to the target value of the **Search For** criteria. If an exact match is not found, the search fails and background data is *not* subtracted from the measurement. However, the measurement is completed and the data is recorded to the measurement data file.

  ☑ The **Use Interpolation** search method performs a linear interpolation on the background data between the two closest matching target values. If the present target value is beyond the data values stored in the background subtraction data file, the data is extrapolated beyond the stored values. This search method requires a minimum of two data records in the background data file.

6. Select the **Initialize Transport** button to reset the transport calibration position. Resetting the transport calibration position does not affect the sample center position.

7. Select the **Set** button to enable (or disable) background data subtraction. If background data subtraction is enabled, subsequent DC or RSO measurements are performed at the specified center position and with the specified measurement parameters. If a match to the search criteria is found in the background subtraction data file, the scaled response values are read from the file and subtracted from the measurement's scaled response values. The regression fit is then applied to the results in order to calculate the sample moment. The immediate-mode measurement dialogs indicate that background data is being subtracted (figure 2-9), and you are unable to modify the measurement parameters that were specified in the background subtraction data file.

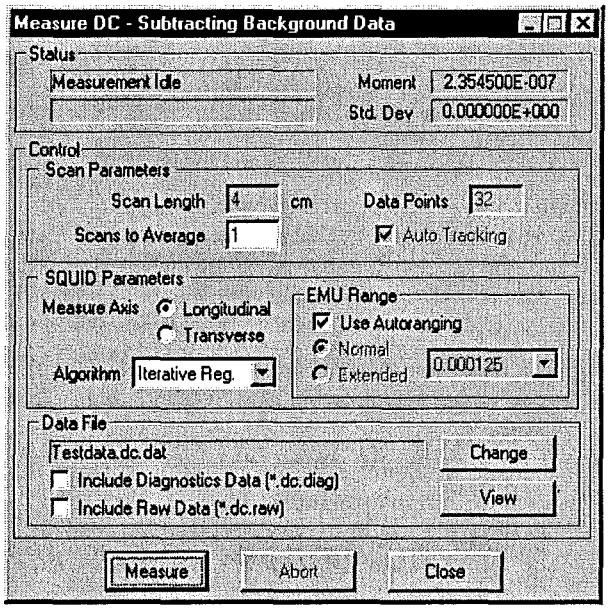

Figure 2-9. **Measure DC** Dialog Box Indicating that Background Data Subtraction Is Enabled

2.4 ABS Sequence Commands

Recording background subtraction data and applying background data to sample measurements can also be done in sequence mode. Two Automated Background Subtraction sequence commands—**Record Data** and **Subtract Data**—are in the **Measure Commands** group in the sequence command bar (figure 2-10). The **Record Data** and **Subtract Data** sequence commands perform the same functions as their immediate-mode measurement counterparts.

To take measurements in sequence mode, you complete the same three-step process you use in immediate mode: center the sample, record the background response, and subtract the background data. Refer to section 2.2.

The *Magnetic Property Measurement System: MPMS MultiVu Application User's Manual* discusses MPMS MultiVu sequence files and all basic system sequence commands in detail.

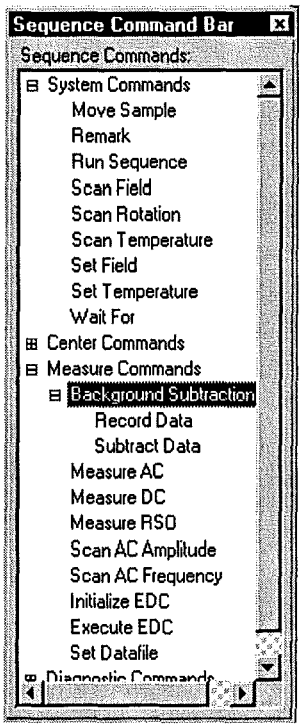

Figure 2-10. Sequence Command Bar Showing ABS Measurement Commands

2.4.1 Record Data Sequence Command

The **Record Data** sequence command opens the **Record Background Data** dialog box (figure 2-11), which, like the dialog for immediate mode, is used to enable the recording of background response data and to specify the measurement parameters for doing so. Refer to section 2.3.2 for detailed information on recording the background response.

The command parameters for the **Record Background Data** dialog box are identical in immediate mode and sequence mode except sequence mode includes the **Use present center position at time of execution** check box. You enable this check box to force the command to set the absolute center position when the command is executed, not when you record it. Setting the absolute center position when the command is executed allows you to use the centering sequence commands to center the sample holder and use its absolute center position for generating the background response data. This technique requires that the sample be mounted at the same position as the sample holder's dipole response peak. Consequently, this technique works well when the sample and sample holder have the same center position relative to each other.

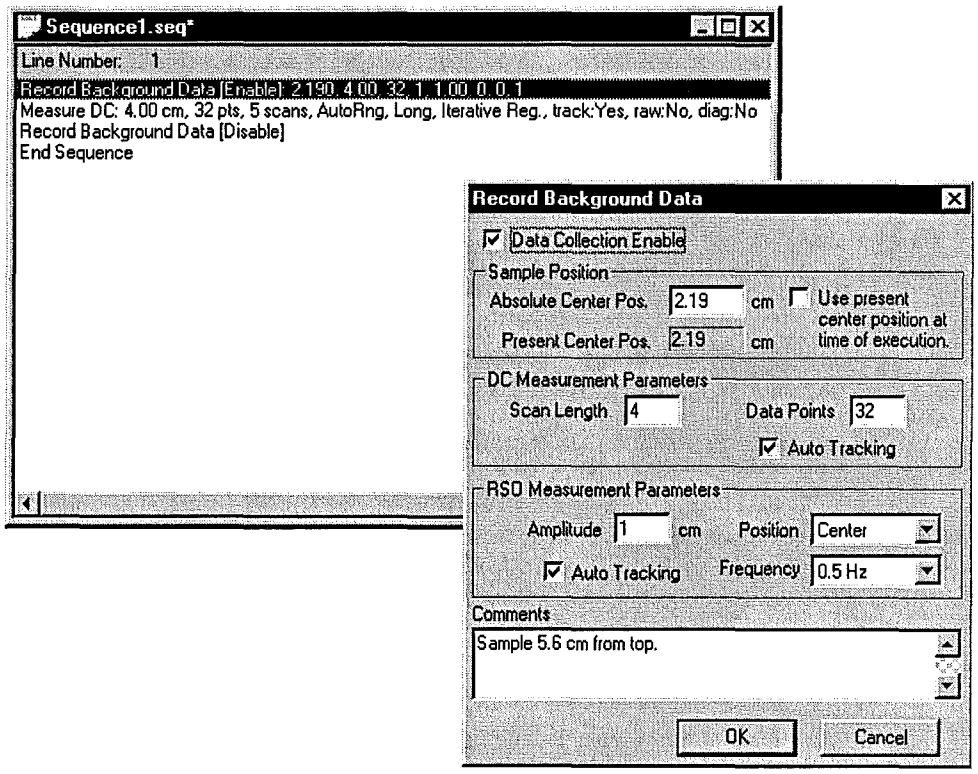

Figure 2-11. Using the **Record Data** Sequence Command

2.4.2 Subtract Data Sequence Command

The **Subtract Data** sequence command opens the **Subtract Background Data** dialog box (figure 2-12), which, like the dialog for immediate mode, is used to enable the application of background response data and to specify the background subtraction data file and the search criteria for the data. The immediate-mode and sequence mode **Subtract Background Data** dialogs are identical. Refer to section 2.3.3 for detailed information on subtracting background data.

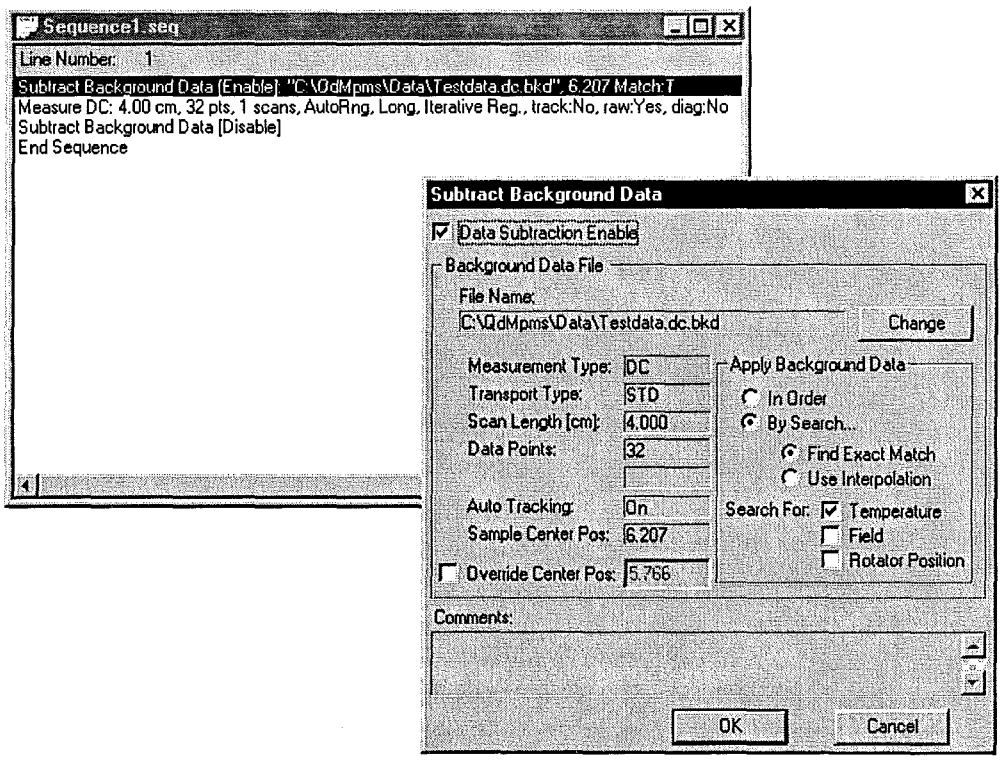

Figure 2-12. Using the **Subtract Data** Sequence Command

A P P E N D I X A

Background Subtraction Data Files

A.1 Introduction

This appendix contains the following information:

- Section A.2 presents an overview of background subtraction data files.
- Section A.3 describes and illustrates the data file format used in background subtraction data files.

A.2 Overview of Background Subtraction Data Files

Background data is recorded to a standard MPMS MultiVu data file that has the same base name as the active measurement data file but is distinguished from the measurement data file by the `.bkd` file extension (for example, `basename.dc.bkd` or `basename.rso.bkd`).

The header in the background subtraction, or `.bkd`, data file contains the measurement-specific parameters and the sample center position in absolute coordinates. These values are used when the background data in the file is applied to future measurements.

Each record of the background subtraction data file contains the target and actual values of the temperature, magnetic field, and rotator position. Each record also contains all scaled response values (voltages) for the average of the measurement scans.

When automated background data subtraction is enabled, the specified background subtraction data file is read and the scaled response values are stored in a temporary binary file. Indexes for search parameters for this binary file are created and sorted to ensure rapid location of parameter data. You may choose to interpolate between sets of response values to get the closest match. The data search engine uses linear interpolation.

A.3 Background Subtraction Data File Format

Every data file consists of a header section and a data section. The header defines the type of data stored in the file and the default graph format of the file. The data section lists the actual stored data. The header sections contain the same type of information from file to file. Data sections contain data that is specific to the measurement option that generated the data and to the type of data stored in the file.

The format of the data files is designed such that the files may be easily imported by other graphic applications, such as Microsoft Excel. The data file format is comma delimited.

A.3.1 Data File Header

The data file header, which is created when the data file is created, can never be overwritten.

The data file header is preceded by the following bracketed keyword:

```
[Header]
```

The Title line contains the string that appears at the top of the graph view of the data file. For example,

```
TITLE, MPMS AC Measurement
```

The ByApp line specifies which application and measurement option created the file.

```
BYAPP, MPMS Measurement, 1.0, Summary
```

The FileOpenTime line indicates the numerical timestamp and the timestamp's formatted text of the time at which the file was created.

```
FILEOPENTIME, 889141960.579000 3/5/2000, 3:52:40 PM
```

The Info lines supply additional information about the measurement. MPMS MultiVu does not use the information in the Info section when it plots the data.

```
INFO, NAME, My Sample
INFO, WEIGHT, 1.000
INFO, AREA, 1.000
INFO, LENGTH, 1.000
INFO, SHAPE, 0
INFO, COMMENT,
INFO, SEQUENCE FILE: Pause.MV.Seq
INFO, ABS, MEAS_TYPE, RSO
INFO, ABS, TRANSPORT, SERVO
INFO, ABS, RSO_AMPLITUDE, 3.000
INFO, ABS, RSO_POSITION, 0
INFO, ABS, FREQUENCY, 3
INFO, ABS, AUTO_TRACK, 1
INFO, ABS, CENTER_POS, 4.953
INFO, ABS, COMMENT, ""
```

The StartupGroup line indicates which field group is the default group for the graph data selection.

```
STARTUPGROUP
```

The FieldGroup lines indicate which data selection items are included in each field group. The FieldGroup lines list the data items in the numerical order of their appearance in the file.

```
FIELDGROUP, Longitudinal, 1, 2, 3, 4, 5, 6, 7, 8 ,9 19
FIELDGROUP, Transverse, 1, 2, 3, 4, 10, 11, 12, 13, 14 19
```

The PlotAppearance line defines the plot appearance of the graph view of the data file.

```
PLOT_APPEARANCE, ALL, HORZ_GRID_ON, VERT_GRID_ON, MARKERS_
AND_LINES
```

A.3.2 Data Section

The data section is preceded by the following bracketed keyword:

```
[Data]
```

The data section keyword is immediately followed by one line indicating the titles used for the data fields for every line of data that follows.

The data fields for the file are as follows:

```
Time, Comment, Target Field (Oe), Actual Field (Oe), Target
Temp (K), Actual Temp (K), Delta Temp (K), Scale Factor,
Rotator Position (Deg), EC Comp. Running, Error, V1, V2, V3,
... V(N)*
```

* Where N is the number of points per scan for DC measurements or 64 for RSO measurements.

A P P E N D I X B

Additions to DC and RSO Data File Formats

B.1 Introduction

This appendix contains the following information:

- Section B.2 lists the changes that have been made to the DC and RSO data file formats so that those data files can accommodate ABS data.

B.2 ABS-Imposed Additions to DC and RSO Data File Formats

The following fields have been added to the DC `.dat` file format:

```
Long Moment [w/o ABS] (EMU), Long Std Dev [w/o ABS], Long Reg
Fit [w/o ABS], Long Percent Error [w/o ABS] (%), Trans Moment
[w/o ABS] (EMU), Trans Std. Dev [w/o ABS], Trans Reg Fit [w/o
ABS], Trans Percent Error [w/o ABS] (%), Using ABS
```

The following fields have been added to the RSO `.dat` file format:

```
Long Moment [w/o ABS] (EMU), Long Moment Std Dev [w/o ABS],
Long Offset [w/o ABS] (cm), Long Offset Std Dev [w/o ABS],
Long Reg Fit [w/o ABS], Trans Moment [w/o ABS] (EMU), Trans
Moment Std Dev [w/o ABS], Trans Offset [w/o ABS] (cm), Trans
Offset Std Dev [w/o ABS], Trans Reg Fit [w/o ABS],  Using ABS,
```

NOTE

When background data is being subtracted, the `Using ABS` field indicates 1 and the `[w/o ABS]` fields record the moment results *before* the background data is subtracted from the measured response.

The following fields have been added to the DC `.raw` and `.lastscan` file formats:

```
Long Scaled Response, Long Avg. Scaled Response, Long
Background Response, Long Response [w/ABS], Long Detrended
Resp. [w/ABS], Long Fit [w/ABS], Long Detrended Fit [w/ABS],
Trans Scaled Response, Trans Avg Scaled Response, Trans
Background Response, Trans Response [w/ABS], Trans Detrended
Resp. [w/ABS], Trans Fit [w/ABS], Trans Detrended Fit [w/ABS],
```

The following fields have been added to the RSO `.raw` and `.lastscan` file formats:

```
Long Scaled Response, Long Avg. Scaled Response, Long
Background Response, Long Response [w/ABS], Long Detrended
Resp. [w/ABS], Long Fit [w/ABS], Long Detrended Fit [w/ABS],
Trans Scaled Response, Trans Avg. Scaled Response, Trans
Background Response, Trans Response [w/ABS], Trans Detrended
Resp. [w/ABS], Trans Adjusted Fit, Trans Detrended Fit [w/ABS]
```

NOTE

The fields indicating `[w/ABS]` are the scaled response values *after* the background response data has been subtracted. All scaled values are scaled to the SQUID range, gain, and calibration values at the time of the measurement.

Index