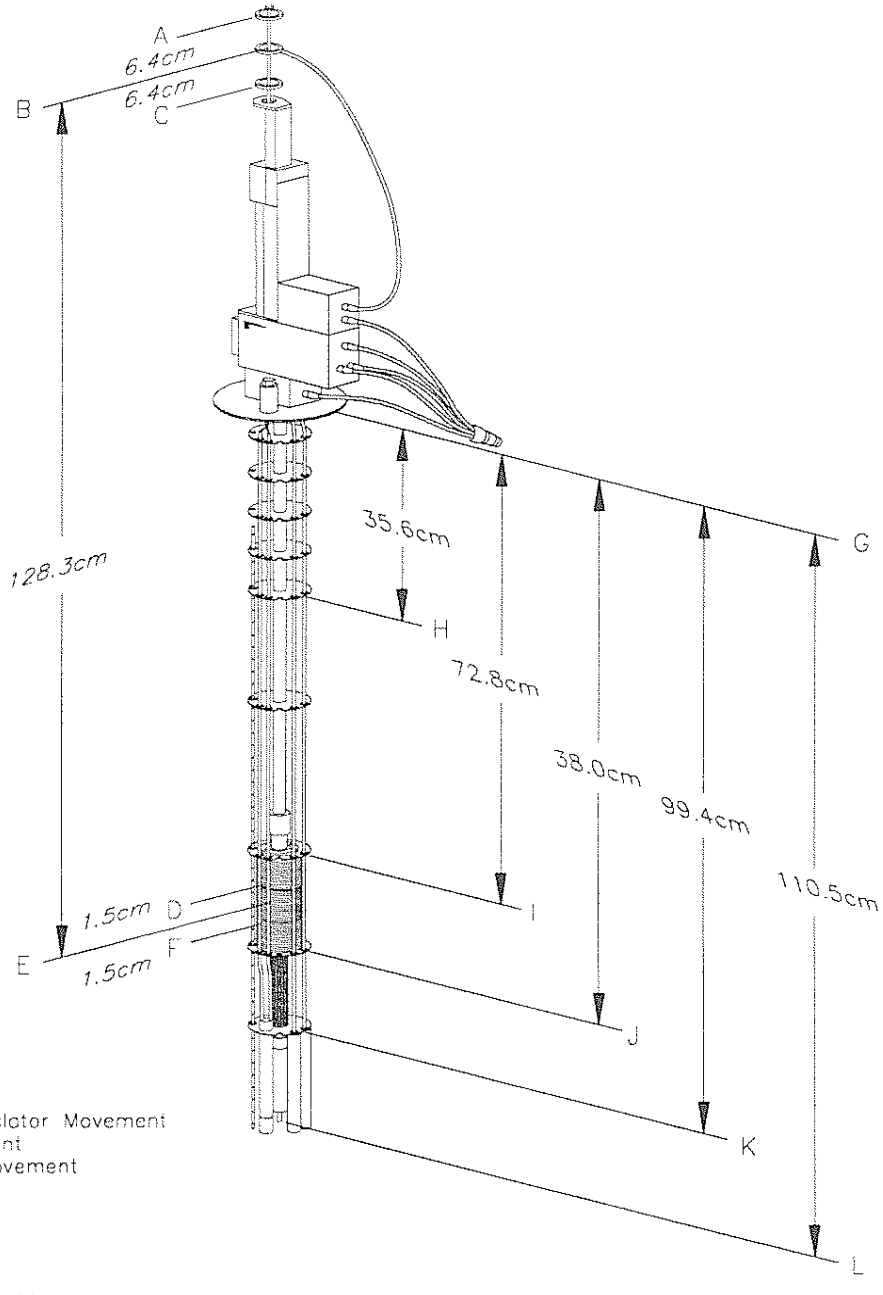


A . Upper Limit of Vertical Translator Movement
B . Center of Translator Movement
C . Lower Limit of Translator Movement
D . Top of Sensing Coils
E . Center of Sensing Coils
F . Bottom of Sensing Coils
G . Bottom of Dewar Top Plate
H . Top of Dewar Belly
I . Top of Superconducting Solenoid
J . Bottom of superconducting Solenoid
K . Top of SQUID Housing
L . Lowest Point of the Plate

FILE: D014002A

**Figure 1-2** MPMS Probe