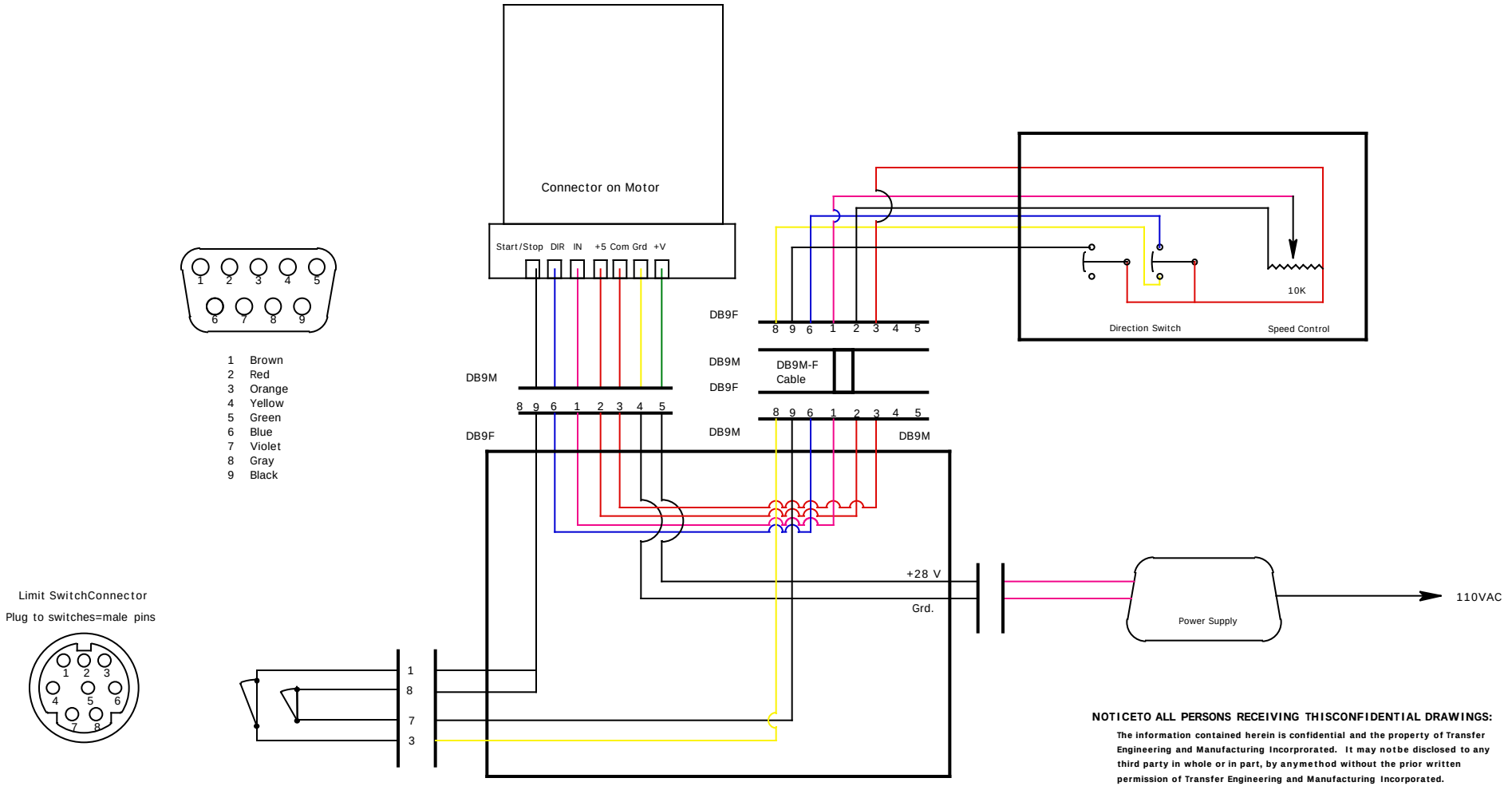

End point limit switches, normally closed

NOTICETO ALL PERSONS RECEIVING THISCONFIDENTIAL DRAWINGS:

The information contained herein is confidential and the property of Transfer Engineering and Manufacturing Incorprorated. It may notbe disclosed to any third party in whole or in part, by anymethod without the prior written permission of Transfer Engineering and Manufacturing Incorporated.

DIMENSIONS X.XX = ± 0.01 X.XXX= ± 0.005	TE TRANSFER ENGINEERING AND MANUFACTURING, INC.	2199 Warm Springs Ct., Suite 1 Fremont, CA 94539 (510) 651-3000
MATERIAL:	TITLE: Schematic, Speed Control Stepper motor drive system	
FINISH: 32		
DRAWN: M. ACKERET	SIZE / FSCM NO / DWG NO / REV	
CHECKED:		
ISSUED: 3/16/04	SCALE / SHEET	