# ESCA 8.5
# Release Notes

N. Al-Shamma
8 Apr 1990

This document describes the changes in ESCA between versions 8.4 and 8.5 See Joe Hughes' *ESCA 8.4 Notes* for differences since ESCA 8.31.

## 1. Sensitivity Factors

The "UPDATING SENSITIVITY FACTORS" message and delay are no longer encountered when analyzing data from different X-ray sources.

Sensitivity factors are adjusted using the sensitivity factor exponent to correct for instrumental and escape depth effects. The adjustment is a function of reference energy, which in turn is a function of X-ray source.

Originally, ESCA assumed that the source was always due to the Al K-alpha line and the entire table was adjusted at one time. Then, in a recent version of ESCA, support was added for different sources. This feature was poorly implemented, however, making it very difficult to switch back and forth between data collected with different sources. Every time data from a different source was analyzed, the Scofield Table was read from disk, and all 1300 entries were adjusted for the new reference energy. This would take a minimum of about 10 seconds, and could take minutes on an older computer with a full hard disk.

The software now applies the adjustment only as needed when sensitivity factors are used in the Composition Table or in profile or map analysis. A fully adjusted copy of the factors is used for Survey Analysis. When Survey Analysis is first used after starting the program, or when data from a different source is used, this copy of sensitivity factors is initialized using the the Scofield Table already in memory. No disk access is required.

## 2. Signature Correction

Previously, an extremely non-uniform signature could result in a loss of counts when the signature was applied. To correct this, a "conservation of counts" algorithm was added to the signature correction This correction is applied at the end of a region or single scan, not during it. The current correction is still applied to displayed data during accumulation. Thus, and the end of a region, the counts may appear to dramatically increase.

The "conservation of counts" algorithm looks at the number of counts in the corrected and uncorrected spectra. It then takes the ratio of counts and applies it to each channel of data so that the total counts in the resulting spectrum is equal to the number of counts measured (i.e., the number of counts in the uncorrected spectrum).

## 3. High Count Rates/Maximum Counts

Accumulation is halted when the total uncorrected counts exceeds 900 million ($0.9 \times 10^9$). Previously, the software could crash if the counts exceeded one billion ($1.0 \times 10^9$), or, the displayed data would be scaled down to one million ($1.0 \times 10^6$), resulting in a confusing display.

The software now checks at the end of every scan, or once a minute for unscanned data, whether the counts exceed 900 million. If they do, the region is considered done, a message is sent to the printer, and accumulation continues to the next region.

## 4. Satellite Removal

An additional satellite removal algorithm has been added which only applies the correction to photoelectron peaks. This is to prevent the application of the removal algorithm to Auger peaks. It is accessed by holding down the shift key when pressing [*REMV SATELLIT] in the DATA REDUCTION menu. This softkey only appears for non-mono data.

A side-effect of this algorithm is that the Composition Table and Survey Analysis tables are cleared when it is used. This is not considered serious since the satellite removal will normally be done before any other data analysis.

The new algorithm uses the Find Peaks routine (in the Survey Analysis menu), then applies the satellite removal algorithm to the channels within the baseline of photoelectron peaks. An additional test is added for loss peaks, since they can be put in the same category as Auger peaks by the Find Peaks routine. To be considered a loss peak, a peak must have photoelectron peak of at least twice its height which is -10 to -28 eV away.

## 5. Aperture

The new aperture is supported. This aperture has two leaves. Aperture setting one moves the inner leaf into position. Aperture setting two moves both leaves into position. The software applies a one second delay whenever one of the leaves is moved. Each leaf is moved individually.

## 6. Ultraviolet Photoelectron Spectroscopy

A new option was added to the Spot setting in single scan setup and the element table. It is accessed by typing "UPS" for the Spot. When entered, the X-ray source will be turned off during accumulation, and UPS will be printed in printouts and plots. "UPS" may also be entered in lower case, or as just the first one or two characters. For example, "u" or "UP" will also be interpreted as the "UPS" source.

## 7. DIAGNOSE

Two changes were made:

a. The dispersion constant for Res 1 is just set to half of that for Res 2. The partially developed algorithm which was erroneously shipped with the product has been removed.

b. The instrument constants for the V1 curves are now determined by DIAGNOSE. A new softkey, [Calc V1 curves], appears on the top menu if the 8701B power supply is detected.

## 8. Composition Table Printout

The file description and collection date are now printed out on the long Composition Table printout. (No change was made to the short printout.)

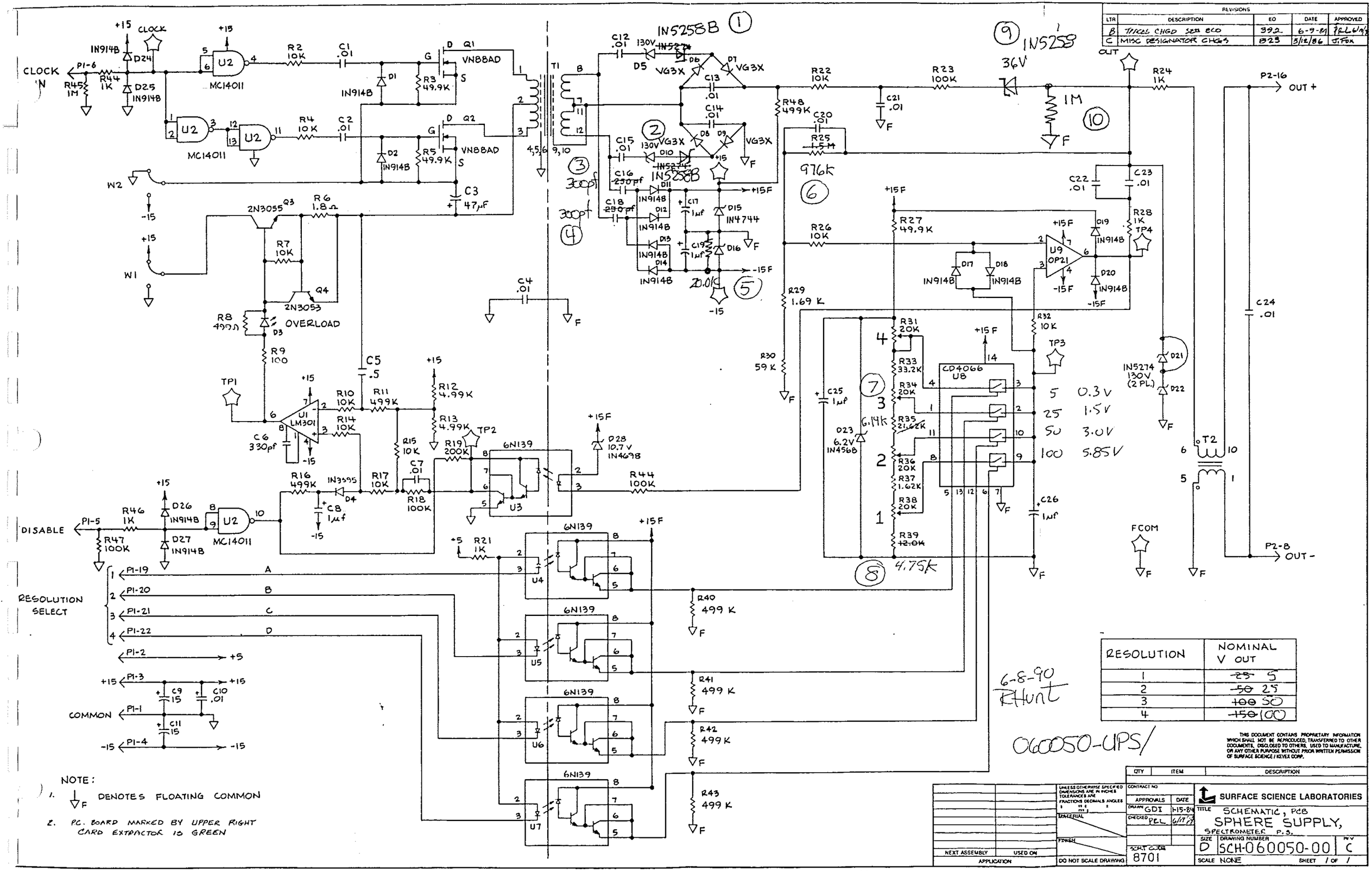


| REVISIONS | | | | |
|---|---|---|---|---|
| LTR | DESCRIPTION | EO | DATE | APPROVED |
| B | TRACES CHGD SEE ECO | 392 | 6-9-89 | PRL 6/9/89 |
| C | MISC DESIGNATOR CHGS | 823 | 5/12/86 | J.FOX |

| RESOLUTION | NOMINAL V OUT |
|---|---|
| 1 | ~~25~~ 5 |
| 2 | ~~50~~ 25 |
| 3 | ~~100~~ 50 |
| 4 | ~~150~~ 100 |

NOTE:

1. ⏚F DENOTES FLOATING COMMON
2. P.C. BOARD MARKED BY UPPER RIGHT CARD EXTRACTOR IS GREEN

THIS DOCUMENT CONTAINS PROPRIETARY INFORMATION WHICH SHALL NOT BE REPRODUCED, TRANSFERRED TO OTHER DOCUMENTS, DISCLOSED TO OTHERS, USED TO MANUFACTURE, OR ANY OTHER PURPOSE WITHOUT PRIOR WRITTEN PERMISSION OF SURFACE SCIENCE / KEYEX CORP.

| QTY | ITEM | DESCRIPTION |
|---|---|---|

UNLESS OTHERWISE SPECIFIED DIMENSIONS ARE IN INCHES TOLERANCES ARE FRACTIONS DECIMALS ANGLES

MATERIAL

FINISH

DO NOT SCALE DRAWING

| NEXT ASSEMBLY | USED ON |
|---|---|
| APPLICATION | |

CONTRACT NO

| APPROVALS | DATE |
|---|---|
| DRAWN GDI | 1-15-84 |
| CHECKED PEL | 6/19/84 |

SCALE CODE 8701

SURFACE SCIENCE LABORATORIES

TITLE SCHEMATIC, PCB SPHERE SUPPLY, SPECTROMETER P.S.

SIZE D DRAWING NUMBER SCH-060050-00 REV C

SCALE NONE SHEET 1 OF 1

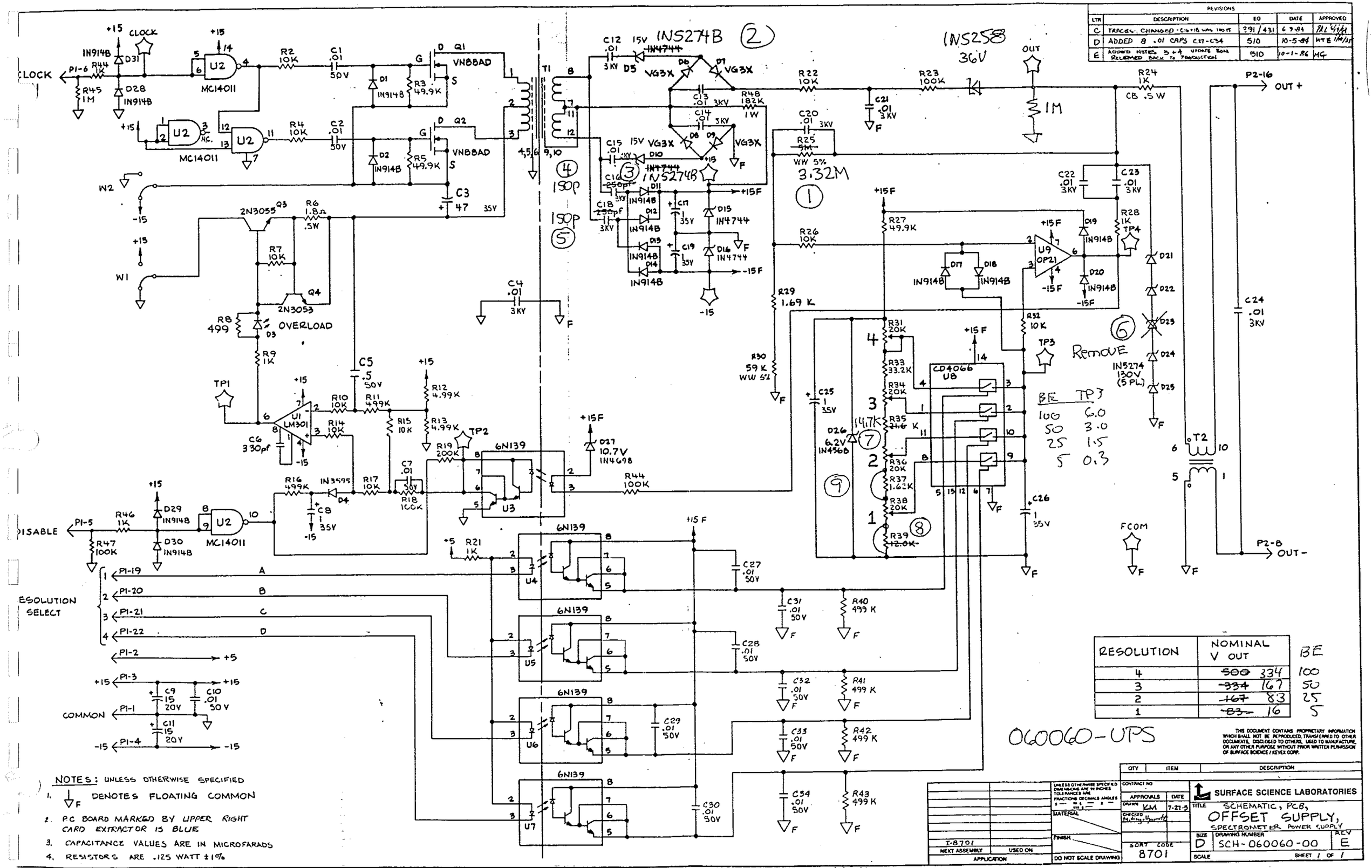


| LTR | DESCRIPTION | EO | DATE | APPROVED |
|---|---|---|---|---|
| C | TRACES CHANGED - C16+18 WAS 100 PF | 291/431 | 6-9-84 | [illegible] |
| D | ADDED 8 .01 CAPS C27-C34 | 510 | 10-5-84 | MTE [illegible] |
| E | ADDED NOTES 3+4 UPDATE BOM RELEASED BACK TO PRODUCTION | 510 | 10-1-86 | MG |

| RESOLUTION | NOMINAL V OUT | BE |
|---|---|---|
| 4 | ~~500~~ 334 | 100 |
| 3 | ~~334~~ 167 | 50 |
| 2 | ~~167~~ 83 | 25 |
| 1 | ~~83~~ 16 | 5 |

060060-UPS

NOTES: UNLESS OTHERWISE SPECIFIED

1. ⏚F DENOTES FLOATING COMMON
2. P.C BOARD MARKED BY UPPER RIGHT CARD EXTRACTOR IS BLUE
3. CAPACITANCE VALUES ARE IN MICROFARADS
4. RESISTORS ARE .125 WATT ±1%

THIS DOCUMENT CONTAINS PROPRIETARY INFORMATION WHICH SHALL NOT BE REPRODUCED, TRANSFERRED TO OTHER DOCUMENTS, DISCLOSED TO OTHERS, USED TO MANUFACTURE, OR ANY OTHER PURPOSE WITHOUT PRIOR WRITTEN PERMISSION OF SURFACE SCIENCE / KEYEX CORP.

| QTY | ITEM | DESCRIPTION |
|---|---|---|

I-8701 — NEXT ASSEMBLY — USED ON — APPLICATION

UNLESS OTHERWISE SPECIFIED DIMENSIONS ARE IN INCHES TOLERANCES ARE FRACTIONS DECIMALS ANGLES

MATERIAL

FINISH

DO NOT SCALE DRAWING

CONTRACT NO

APPROVALS — DATE

DRAWN KM 7-27-3

CHECKED [illegible]

SORT CODE 8701

SURFACE SCIENCE LABORATORIES

TITLE SCHEMATIC, PCB, OFFSET SUPPLY, SPECTROMETER POWER SUPPLY

SIZE D — DRAWING NUMBER SCH-060060-00 — REV E

SCALE — SHEET 1 OF 1

| | | | | |
|---|---|---|---|---|
| A | R8, 9, 10, + R11 WAS 100 K | 390 | 5-30-81 | [illegible] |
| B | ADDED 8 .01 CAPS, C13 THRU C20 | 511 | 10-5-84 | MTE [illegible] |
| C | ADDED NOTES 1 + 2 AND VOLTAGES TO CAPS RELEASED BACK TO PRODUCTION. | 511 | 9-30-86 | [illegible] |

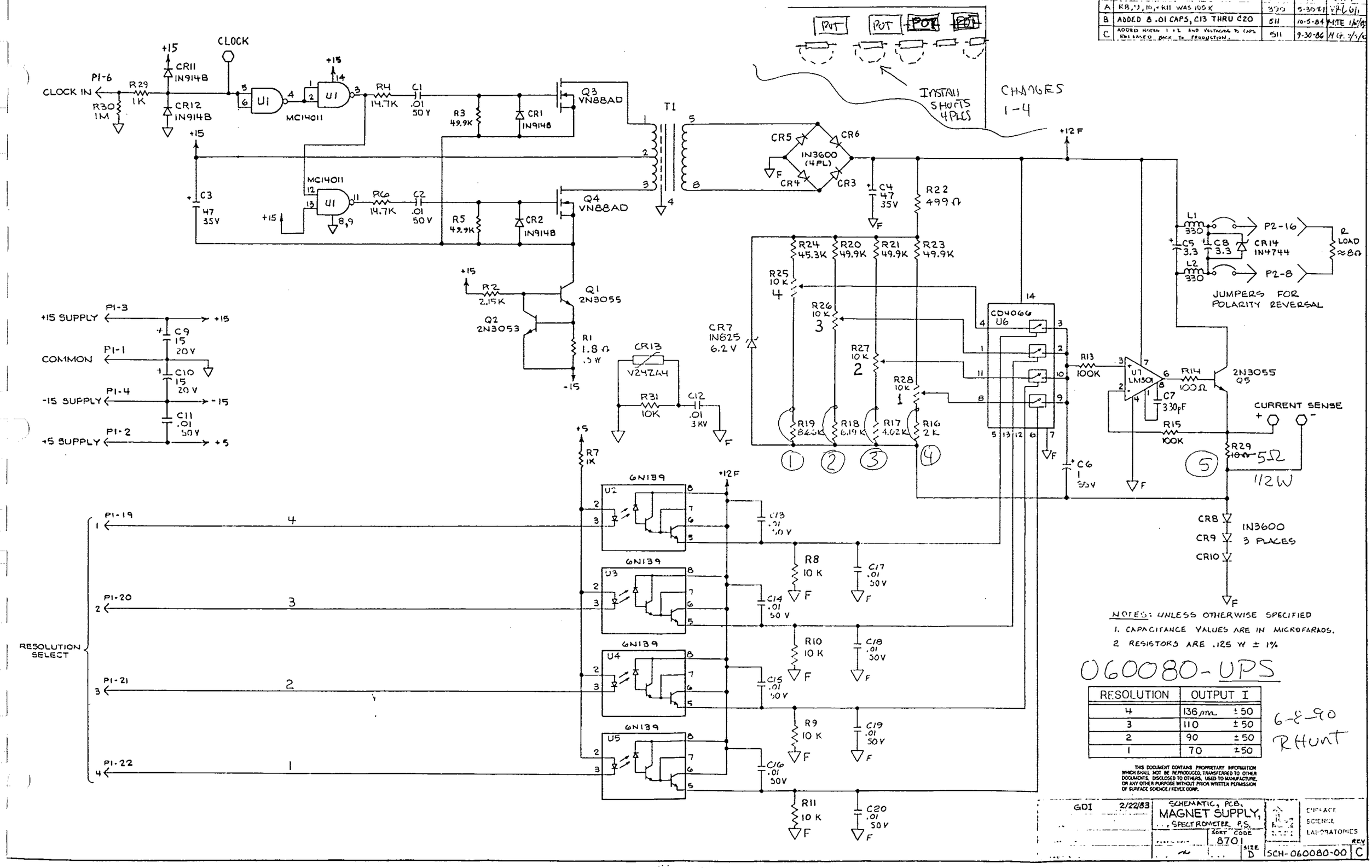


NOTES: UNLESS OTHERWISE SPECIFIED
1. CAPACITANCE VALUES ARE IN MICROFARADS.
2. RESISTORS ARE .125 W ± 1%

060080-UPS

| RESOLUTION | OUTPUT I |
|---|---|
| 4 | 136 mA ± 50 |
| 3 | 110 ± 50 |
| 2 | 90 ± 50 |
| 1 | 70 ± 50 |

6-8-90
RHunt

THIS DOCUMENT CONTAINS PROPRIETARY INFORMATION WHICH SHALL NOT BE REPRODUCED, TRANSFERRED TO OTHER DOCUMENTS, DISCLOSED TO OTHERS, USED TO MANUFACTURE, OR ANY OTHER PURPOSE WITHOUT PRIOR WRITTEN PERMISSION OF SURFACE SCIENCE / KEYEX CORP.

GDI 2/22/83

SCHEMATIC, PCB, MAGNET SUPPLY, SPECTROMETER P.S.

SORT CODE 8701

SIZE D

SURFACE SCIENCE LABORATORIES

SCH-060080-00 REV C

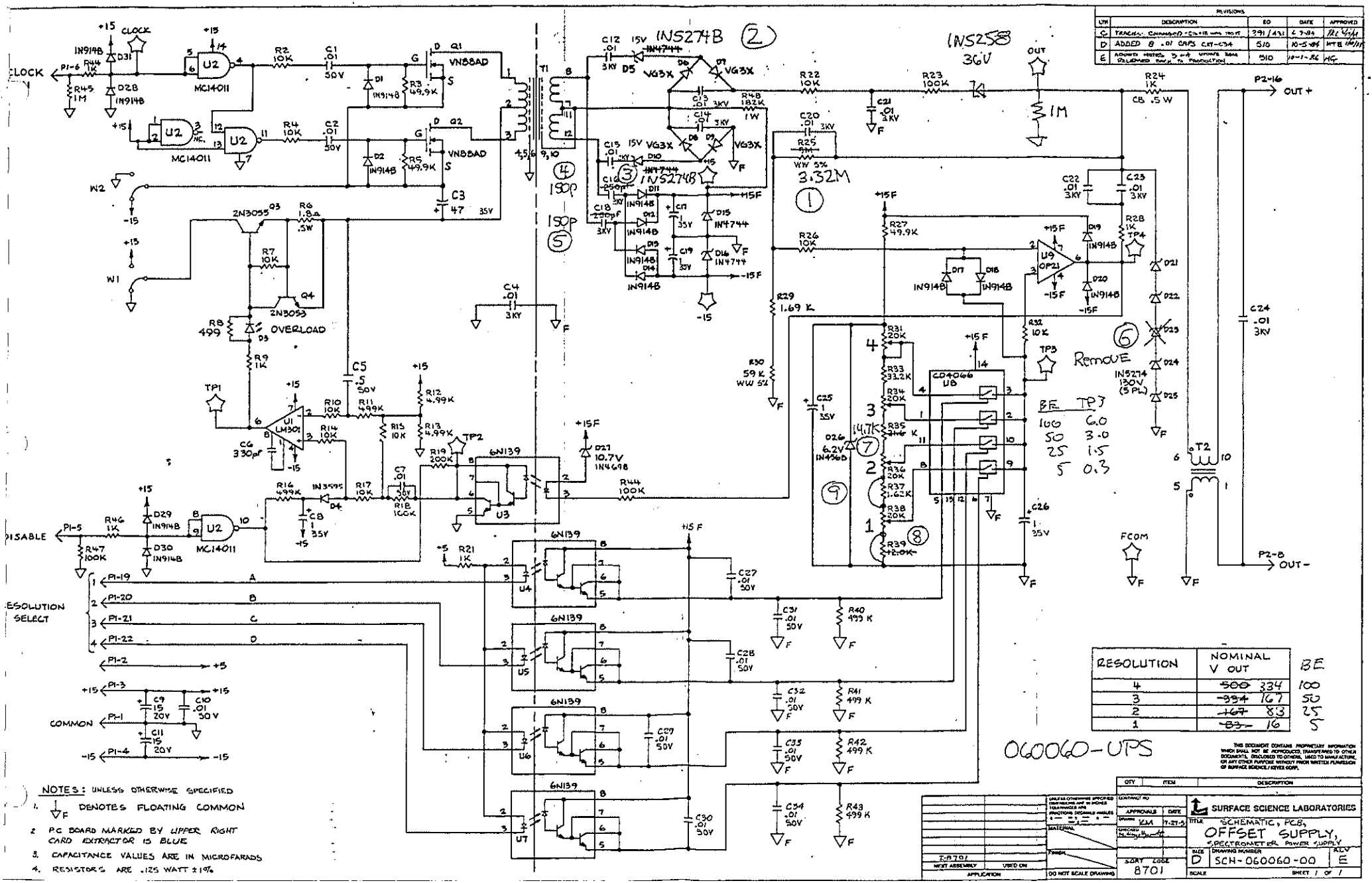


| RESOLUTION | NOMINAL V OUT | BE |
|---|---|---|
| 4 | ~~500~~ 334 | 100 |
| 3 | ~~334~~ 167 | 50 |
| 2 | ~~167~~ 83 | 25 |
| 1 | ~~83~~ 16 | 5 |

| BE | TP3 |
|---|---|
| 100 | 6.0 |
| 50 | 3.0 |
| 25 | 1.5 |
| 5 | 0.3 |

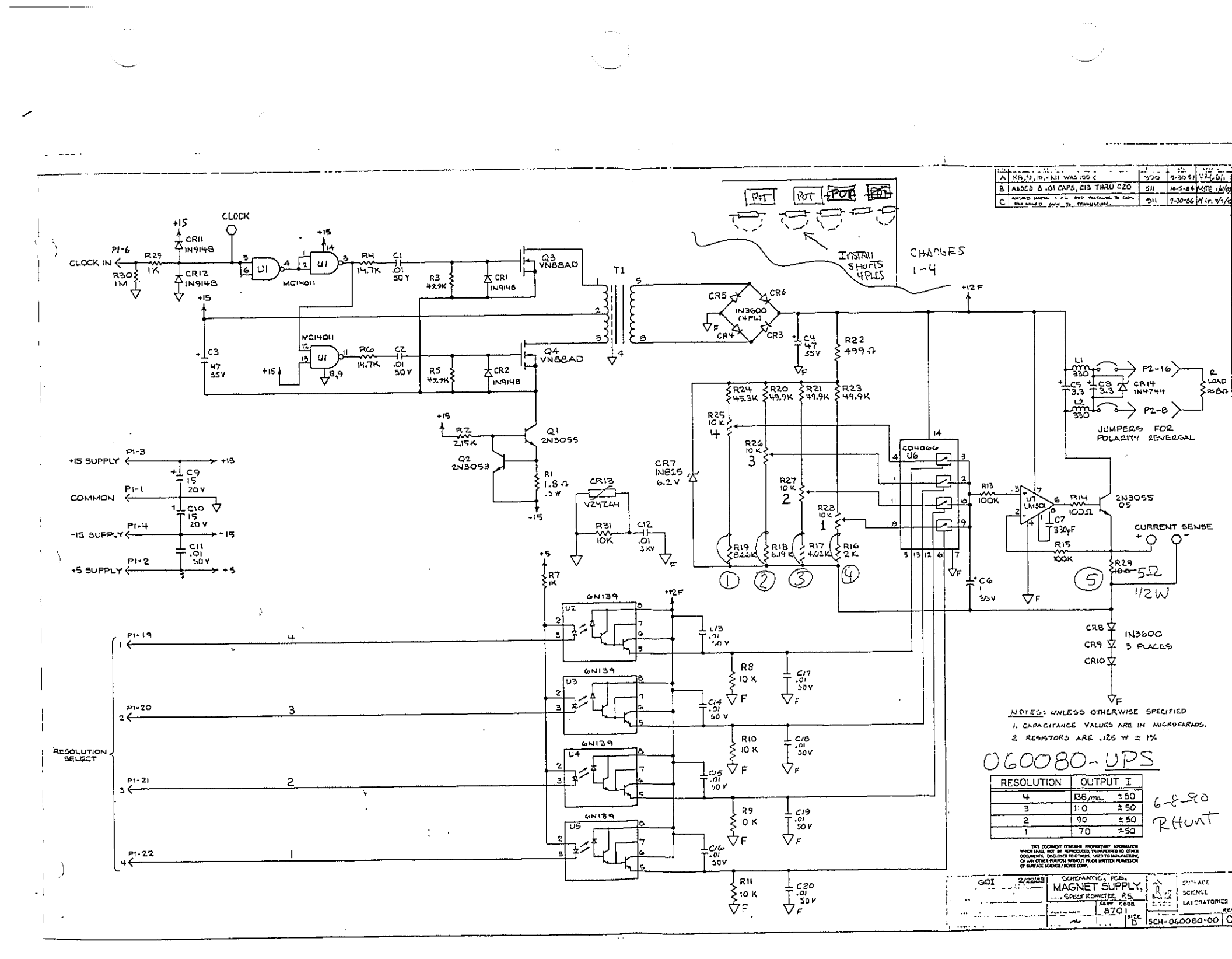
CLOCK
CLOCK IN
P1-6
R29 1K
R30 1M
CR11 IN914B
CR12 IN914B
U1 MC14011
R4 14.7K
C1 .01 50V
R3 49.9K
CR1 IN914B
Q3 VN88AD
T1
R6 14.7K
C2 .01 50V
R5 49.9K
CR2 IN914B
Q4 VN88AD
C3 47 35V
R2 2.15K
Q1 2N3055
Q2 2N3053
R1 1.8Ω .5W
CR13 VZ4Z4H
R31 10K
C12 .01 3KV
CR5 CR6 CR3 CR4 IN3600 (4PL)
C4 47 35V
R22 499Ω
+12F
R24 45.3K
R20 49.9K
R21 49.9K
R23 49.9K
R25 10K 4
R26 10K 3
R27 10K 2
R28 10K 1
CR7 IN825 6.2V
R19 8.25K
R18 6.19K
R17 4.02K
R16 2K
CD4066 U6
R13 100K
U7 LM301
R14 100Ω
2N3055 Q5
C7 330pF
R15 100K
CURRENT SENSE
R29 5Ω 1/2W
L1 330
L2 330
C5 3.3
C8 3.3
CR14 IN4744
P2-16
P2-8
R LOAD ≈8Ω
JUMPERS FOR POLARITY REVERSAL
CR8 CR9 CR10 IN3600 3 PLACES
C6 1 35V
P1-3 +15 SUPPLY
C9 15 20V
P1-1 COMMON
C10 15 20V
P1-4 -15 SUPPLY
C11 .01 50V
P1-2 +5 SUPPLY
R7 1K
6N139 U2
6N139 U3
6N139 U4
6N139 U5
C13 .01 50V
C14 .01 50V
C15 .01 50V
C16 .01 50V
R8 10K
R10 10K
R9 10K
R11 10K
C17 .01 50V
C18 .01 50V
C19 .01 50V
C20 .01 50V
RESOLUTION SELECT
P1-19 4
P1-20 3
P1-21 2
P1-22 1
INSTALL SHORTS 4PLCS
CHANGES 1-4
POT POT POT POT
NOTES: UNLESS OTHERWISE SPECIFIED
1. CAPACITANCE VALUES ARE IN MICROFARADS.
2. RESISTORS ARE .125 W ± 1%
060080-UPS
RESOLUTION | OUTPUT I
4 | 136 ma ±50
3 | 110 ±50
2 | 90 ±50
1 | 70 ±50
6-8-90 RHUNT
THIS DOCUMENT CONTAINS PROPRIETARY INFORMATION WHICH SHALL NOT BE REPRODUCED, TRANSFERRED TO OTHER DOCUMENTS, DISCLOSED TO OTHERS, USED TO MANUFACTURE, OR ANY OTHER PURPOSE WITHOUT PRIOR WRITTEN PERMISSION OF SURFACE SCIENCE/NOVEX CORP.
GDI 2/22/88
SCHEMATIC, PCB, MAGNET SUPPLY, SPECTROMETER P.S.
SURFACE SCIENCE LABORATORIES
SCH-060080-00 C

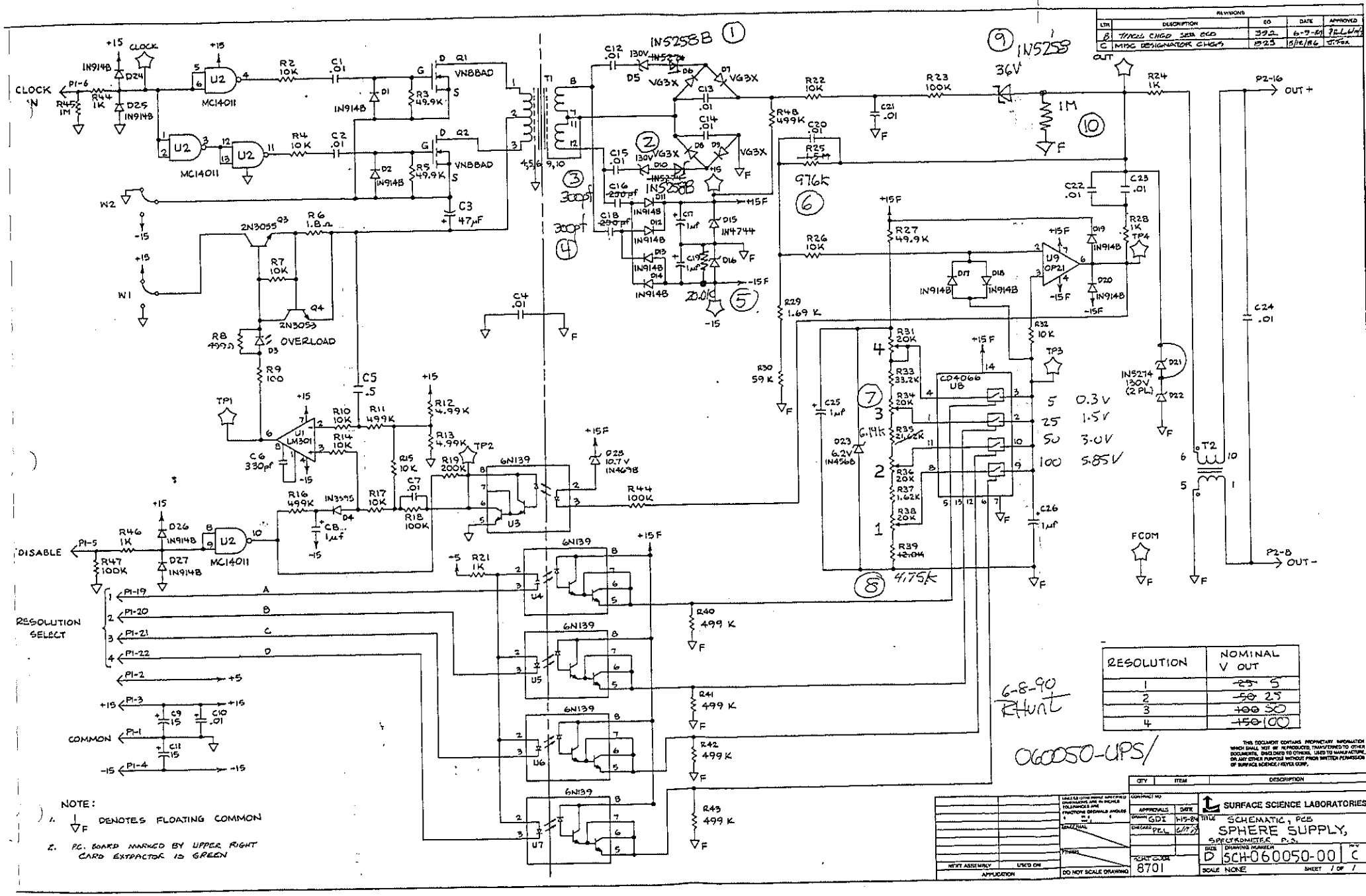


| RESOLUTION | NOMINAL V OUT |
|---|---|
| 1 | ~~25~~ 5 |
| 2 | ~~50~~ 25 |
| 3 | ~~100~~ 50 |
| 4 | ~~150~~ 100 |

6-8-90 RHunt

060050-UPS/

NOTE:

1. ⊥F DENOTES FLOATING COMMON
2. P.C. BOARD MARKED BY UPPER RIGHT CARD EXTRACTOR IS GREEN

| REVISIONS | | | | |
|---|---|---|---|---|
| LTR | DESCRIPTION | EO | DATE | APPROVED |
| B | TRACES CHGD SEE ECO | 392 | 6-9-89 | PEL |
| C | MISC DESIGNATOR CHGS | 1523 | 5/12/86 | JTFox |

THIS DOCUMENT CONTAINS PROPRIETARY INFORMATION WHICH SHALL NOT BE REPRODUCED, TRANSFERRED TO OTHER DOCUMENTS, DISCLOSED TO OTHERS, USED TO MANUFACTURE, OR ANY OTHER PURPOSE WITHOUT PRIOR WRITTEN PERMISSION OF SURFACE SCIENCE / KEYES CORP.

| QTY | ITEM | DESCRIPTION |
|---|---|---|

| APPROVALS | DATE |
|---|---|
| DRAWN GDI | 1-15-84 |
| CHECKED PEL | 6/17/84 |

SURFACE SCIENCE LABORATORIES

TITLE SCHEMATIC, PCB SPHERE SUPPLY, SPECTROMETER P.S.

SIZE D DRAWING NUMBER SCH-060050-00 REV C

SCALE NONE SHEET 1 OF 1

ACHT CODE 8701

DO NOT SCALE DRAWING

NEXT ASSEMBLY | USED ON | APPLICATION