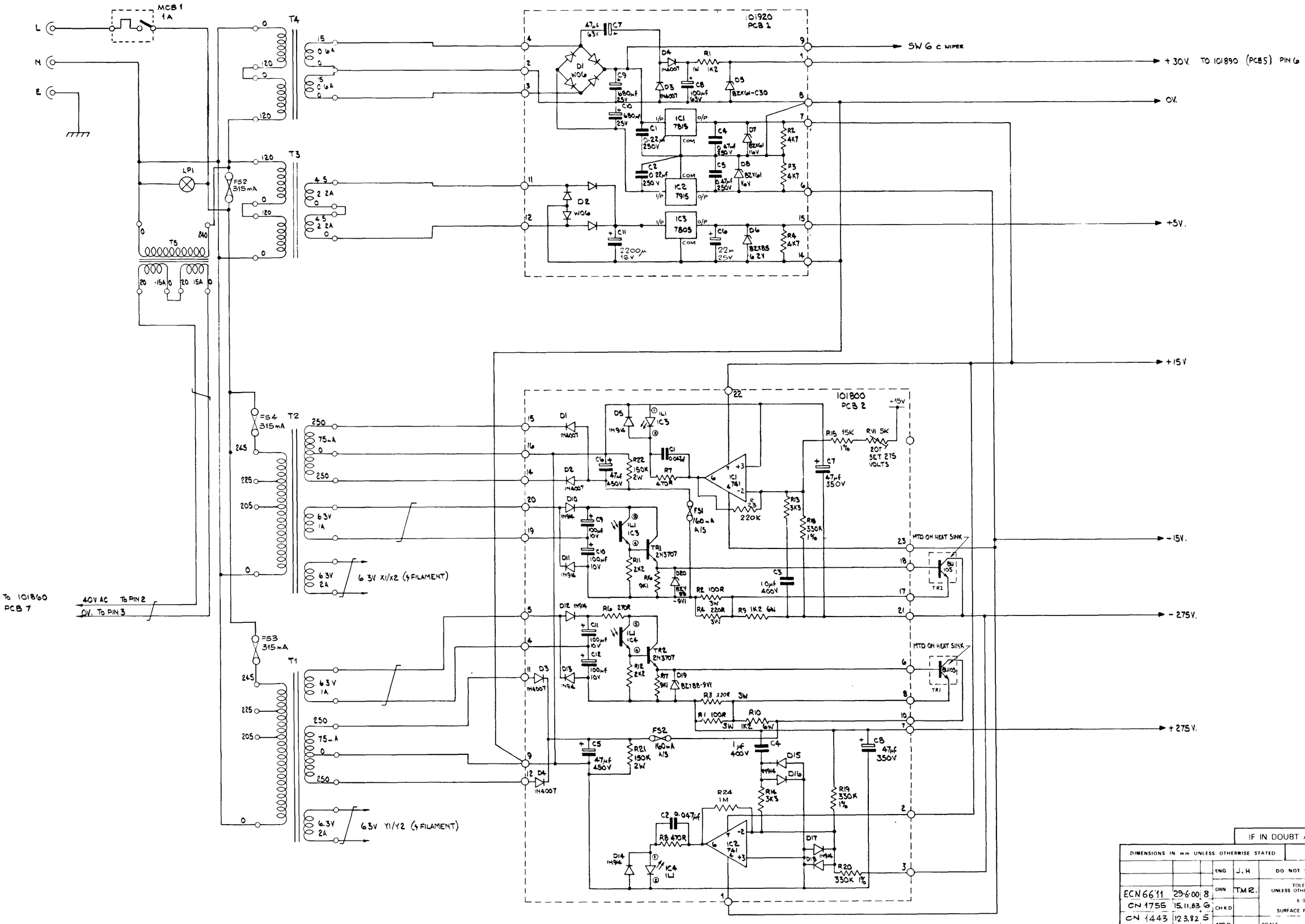

IF IN DOUBT ASK

DIMENSIONS IN mm UNLESS OTHERWISE STATED

REMOVE ALL BURRS AND SHARP EDGES

MODIFICATION	DATE	ISS
ECN 6611	29.6.00	8
CN 1755	15.11.83	6
CN 1443	12.3.82	5
CN 1293	1.7.80	4
CN 1275	23.1.80	3
	24.1.77	2
ORIGINAL	13.12.76	1

ENG J.H

DRN T.M.R.

CHKD

APP'D

DO NOT SCALE DRG

TOLERANCE UNLESS OTHERWISE STATED ± 0.1 mm

SURFACE FINISH 1.6 μm

SCALE –

MATERIAL –

FINISH –

V.G. SCIENTIFIC LTD., EAST GRINSTEAD.

TITLE 346 UNIT POWER SUPPLIES

DRAWING No 346-20-1 SHEET 1 OF 3

Vacuum Generators Ltd