USED ON 400X

ITEM NO.	V.G. Sc. PART Nº	DESCRIPTION	NO. OFF

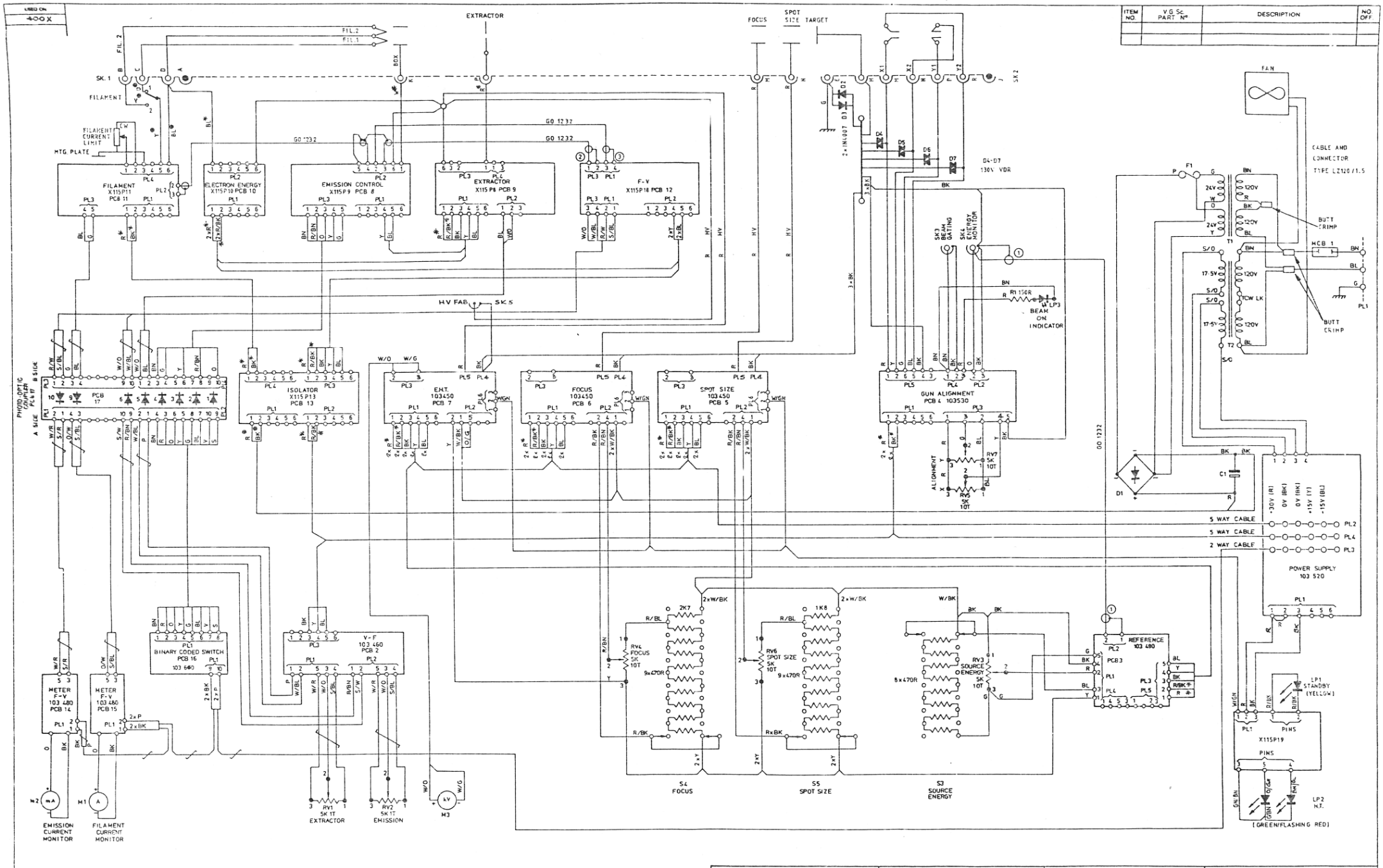

NOTE

WIRES DESIGNATED THUS ✱ TO BE 16/0.2 TYPE 3,
WIRES DESIGNATED THUS ⊕ TO BE 32/0.2 TYPE 3,
ALL OTHER WIRES TO BE 7/0.2 TYPE 1.

DIMENSIONS IN mm UNLESS OTHERWISE STATED				REMOVE ALL BURRS				DO NOT SCALE DRG	PROJECTION
MODIFICATION	DATE	ISS	MODIFICATION	DATE	ISS	ENG	D.R.	TOLERANCE UNLESS OTHERWISE STATED DIM'S 0 ± 1 mm DIM'S 0.0 ± 0.2 mm DIM'S 0.00 ± 0.1 mm ANGLES ± 0°30' SURFACE FINISH 1·6 µm	MATERIAL / FINISH
						DFN	N.C.B.		V.G. SCIENTIFIC LTD., EAST GRINSTEAD
				25.4.88	2	CHK'D		SCALE	TITLE: WIRING DIAGRAM / DRAWING No 400X-29-1
			ORIGINAL	15.2.88	1	APP'D			

STRICTLY CONFIDENTIAL COPYRIGHT V.G. SCIENTIFIC LTD. © 1988

cm./mm. 0 1 2 3 4 5 10 15 20 25 30